Rewarding Learning

Centre Number

Candidate Number

General Certificate of Secondary Education
2017–2018

Science: Single Award

Unit 3 (Physics)
Higher Tier

ML

[GSS32]

FRIDAY 23 FEBRUARY 2018, MORNING

TIME

1 hour 15 minutes, plus your additional time allowance.

INSTRUCTIONS TO CANDIDATES

Write your Centre Number and Candidate Number in the spaces provided at the top of this page.
Write your answers in the spaces provided in this question paper.
Answer **all nine** questions.

INFORMATION FOR CANDIDATES

The total mark for this paper is 75.
Figures in brackets printed down the right-hand side of pages indicate the marks awarded to each question or part question.
Quality of written communication will be assessed in Questions **4(a)** and **7(a)**.

For Examiner's use only	
Question Number	Marks
1	
2	
3	
4	
5	
6	
7	
8	
9	
Total Marks	

1 The diagram below represents a water wave.

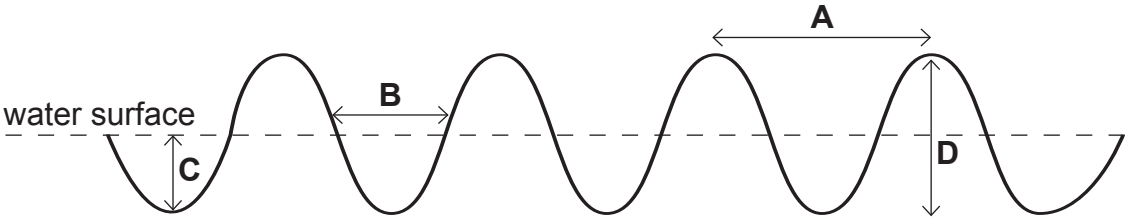

Source: Principal Examiner

(a) Which letter (**A**, **B**, **C** or **D**) represents:

(i) the amplitude?

Answer _____ [1]

(ii) the wavelength?

Answer _____ [1]

(b) Water waves are transverse waves.

(i) Which statement below describes how the particles vibrate in a transverse wave?

Circle the correct answer.

in the same direction as wave travel

at right angles to wave travel

in the opposite direction to wave travel

[1]

(ii) Transverse waves are one type of wave. Name the other type.

_____ [1]

Examiner Only	
Marks	Remark

(c) The table below shows how the speed of sound changes with air temperature.

Air temperature/°C	Speed of sound/ m/s
–1	330.0
10	336.9
21	343.6
33	350.3
45	358.0

(i) Describe the trend shown by this information.

_____

_____

_____ [1]

(ii) Use the equation:

$$\textbf{frequency} = \frac{\textbf{wave speed}}{\textbf{wavelength}}$$

to calculate the frequency of a sound wave that has a wavelength of 0.02 m travelling through air which has a temperature of –1 °C.

Show your working out.

Answer _____ [2]

(iii) State the unit of frequency.

Answer _____ [1]

Examiner Only

Marks	Remark

Examiner Only	
Marks	Remark

2 **(a)** The diagram below shows a newtonmeter being used to pull a brick across a flat table.

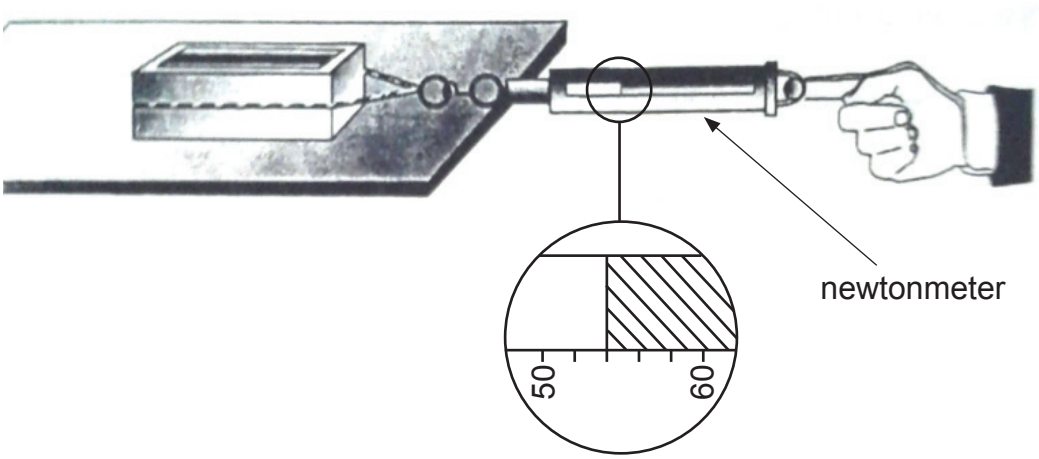

Source: CCEA Artwork

(i) What size of force is shown on the newtonmeter?

Answer _____ N [1]

(ii) As the brick moves across the surface of the table a force is produced which opposes motion. Name this force.

_____ [1]

(iii) Suggest **one** way that the size of this force could be reduced.

_____

_____ [1]

7 The diagram below represents a human eye.

Examiner Only	
Marks	Remark

(a) Name and describe how the parts of the eye produce perfect vision.

In this question you will be assessed on your written communication skills including the use of specialist scientific terms.

_____

_____

_____

_____

_____

_____

_____

_____

_____

_____

_____

_____

_____

_____ [6]

(b) Short sight is a common eye defect. Explain fully the cause of short sight and how it is corrected.

_____

_____

_____

_____

_____ [3]

Examiner Only	
Marks	Remark

8 **(a)** The photograph below shows a variable resistor.

Examiner Only	
Marks	Remark

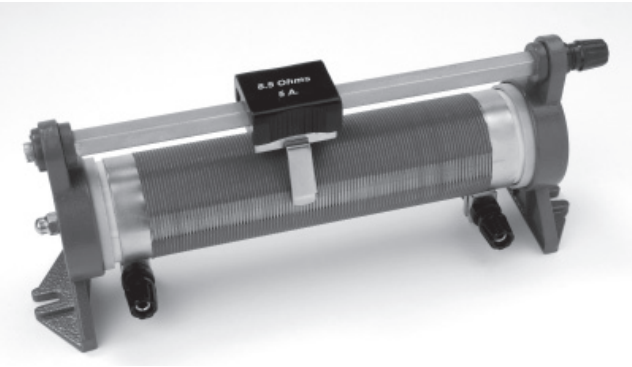

© Trevor Clifford Photography / Science Photo Library

(i) Describe fully how a variable resistor is used to change the resistance and current in a circuit.

_____

_____

_____

_____

_____ [3]

(ii) State **one** use of a variable resistor.

_____ [1]

(b) The graph below shows the effect of temperature on the resistance of three metals.

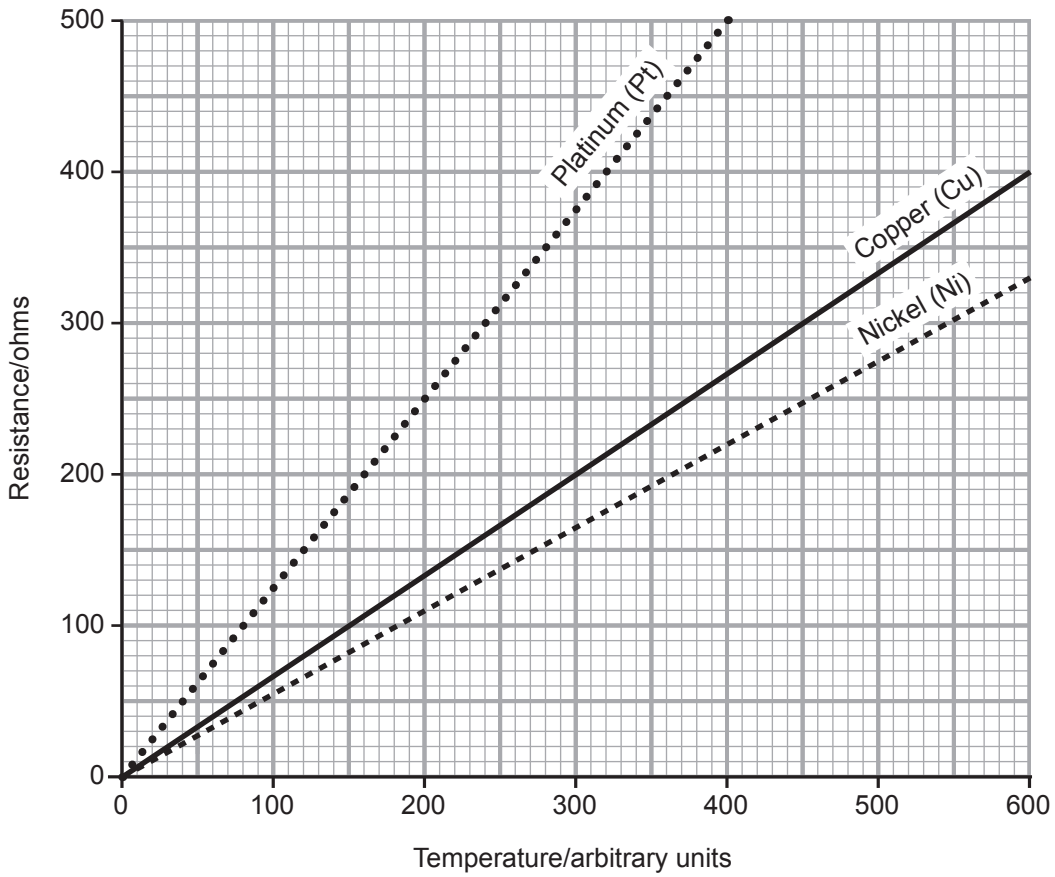

(i) State the conclusions that can be made from the information shown in the graph.

_____

_____

_____

_____ [2]

(ii) Temperature, length and type of metal all have an effect on resistance. Give **one** other factor that affects resistance and describe its effect.

_____

_____

_____ [2]

Examiner Only	
Marks	Remark

9 **(a)** The photograph below shows a skydiver falling through the air.

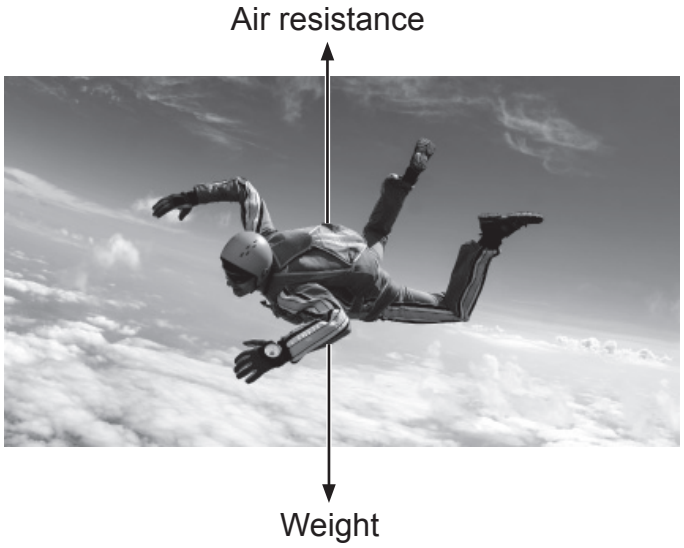

© German-Skydriver / iStock / Thinkstock

The table below shows how the speed of the falling skydiver affects the forces acting on him.

Speed/mph	Air resistance/N	Weight/N
20	35	750
40	150	750
60	310	750
80	540	750
100	750	750

(i) Describe the effect, if any, that speed has on the forces acting on the skydiver.

_____

_____

_____ [2]

Examiner Only	
Marks	Remark

Examiner Only	
Marks	Remark

(ii) Calculate the resultant force at 60 mph and state its effect.

Resultant force _____ N

Effect _____

_____ [2]

(iii) Describe and explain the motion of the skydiver at 100 mph.

_____

_____

_____ [2]

(b) Using the equation below and your knowledge, explain fully how a parachute reduces the force of impact when a skydiver hits the ground.

momentum = mass × velocity

_____

_____

_____

_____

_____ [2]

THIS IS THE END OF THE QUESTION PAPER

Permission to reproduce all copyright material has been applied for.
In some cases, efforts to contact copyright holders may have been unsuccessful and CCEA will be happy to rectify any omissions of acknowledgement in future if notified.

11636.02 **ML**