Rewarding Learning

ADVANCED SUBSIDIARY (AS)
General Certificate of Education
2024

Centre Number

Candidate Number

Mathematics

Assessment Unit AS 2
assessing
Applied Mathematics

MV24

[SMT21]

TUESDAY 28 MAY, AFTERNOON

Time

1 hour 15 minutes, plus your additional time allowance.

Instructions to Candidates

Write your Centre Number and Candidate Number in the spaces provided at the top of this page.

You must answer the questions in the spaces provided.

Do not write on blank pages.

Complete in black ink only.

Questions which require drawing or sketching should be completed using an HB pencil.

Candidates must answer **all** questions from sections A and B.
Equal time should be spent on each section.
Show clearly the full development of your answers.
Answers without working may not gain full credit.
Answers should be given to three significant figures unless otherwise stated.
You are permitted to use a graphic or scientific calculator in this paper.

Information for Candidates

The total mark for this paper is 70. The total available mark for each section of this paper is 35.
Figures in brackets printed at the end of each question indicate the marks awarded to each question or part question.
Answers should include diagrams where appropriate and marks may be awarded for them.
Take $g = 9.8\,\mathrm{m\,s^{-2}}$, unless specified otherwise.
A copy of the **Mathematical Formulae and Tables booklet** is provided.
Throughout the paper the logarithmic notation used is $\ln z$ where it is noted that $\ln z \equiv \log_e z$

Blank Page

(Questions start overleaf)

Answer all questions.

Section A

Mechanics

1 A particle P of mass 6 kg is moving under the action of a constant force, **F** newtons.

At time $t = 0$ seconds the velocity of P is $(6\mathbf{i} - 5\mathbf{j})\,\mathrm{m\,s^{-1}}$

When $t = 8$, P has a velocity of $(14\mathbf{i} - 21\mathbf{j})\,\mathrm{m\,s^{-1}}$

(i) Find the acceleration of P, giving your answer in the form $(a\mathbf{i} + b\mathbf{j})$. [2 marks]

(ii) Find the magnitude and direction of **F**.
[4 marks]

2 Adam and Ben are competing in a cycle race.

They are both sitting on their bikes at the starting line of a straight horizontal racetrack with the finish line 100 m away.

At time $t = 0$ seconds, Adam starts from rest and accelerates uniformly for four seconds to a maximum velocity of $10\,\mathrm{m\,s^{-1}}$ and then maintains this velocity until he crosses the finish line.

At time $t = 0$, Ben starts from rest and accelerates uniformly at $2\,\mathrm{m\,s^{-2}}$ until he crosses the finish line.

(i) Sketch a velocity–time graph for Adam's motion. [1 mark]

(ii) Determine who wins the race.
[6 marks]

3 A box of mass 10 kg rests on a rough plane inclined at 30° to the horizontal.

The box is held in equilibrium by a light, inextensible string which makes an angle of 20° with the plane.

The box is on the point of sliding down the plane.

The coefficient of friction between the box and the plane is 0.4

(i) Complete the diagram below, showing all the external forces acting on the box. [2 marks]

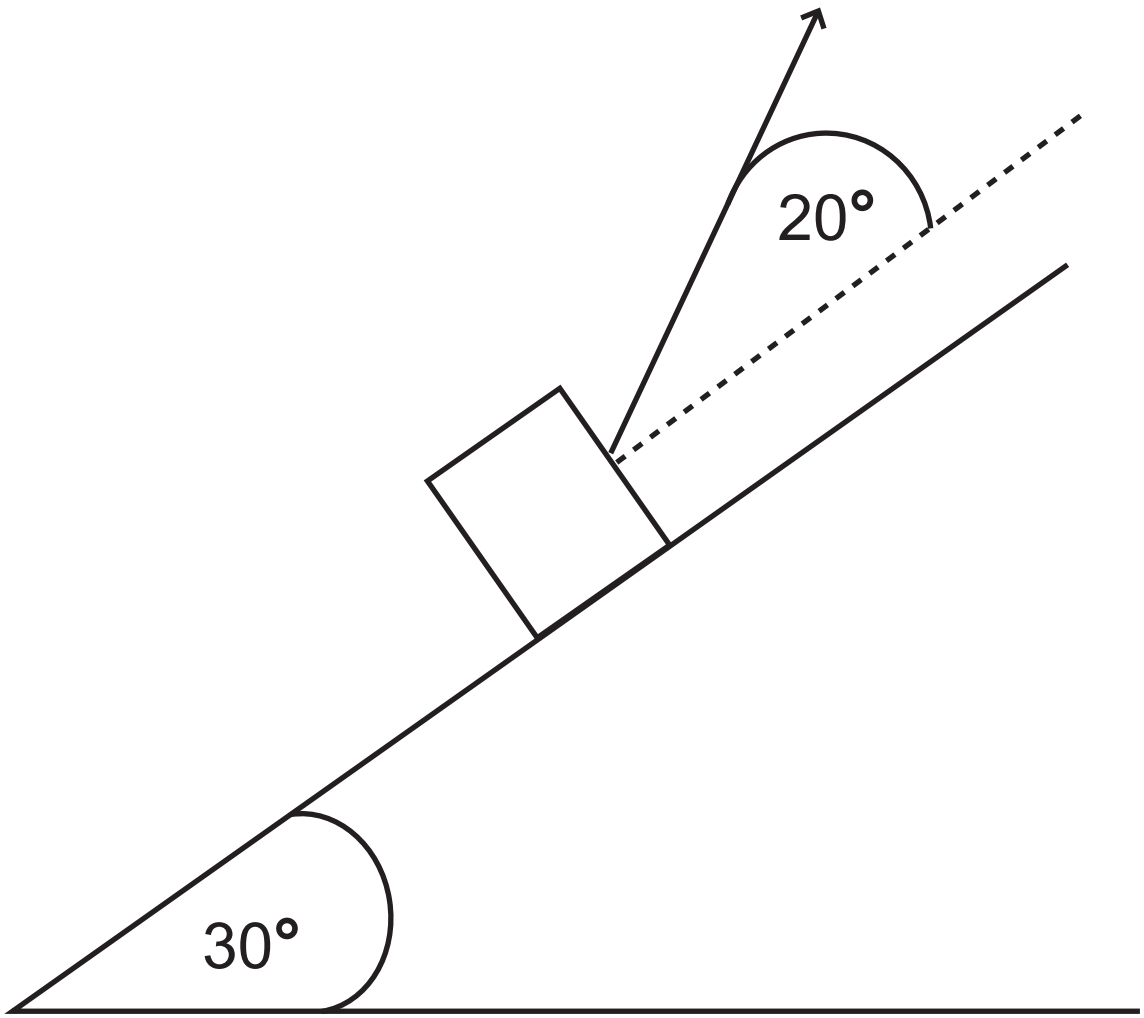

(ii) By modelling the box as a particle, find the tension in the string. [7 marks]

4 **Fig. 1** below shows two particles, A and B, attached to the ends of a light, inextensible string which passes over a smooth fixed pulley.

A has mass m kg and B has mass 1.3 kg, where $m < 1.3$

Initially both particles are held, with the string taut, at a height of 2.5 m above a horizontal surface.

Both A and B are hanging d metres below the pulley, where $d > 2.5$

Fig. 1

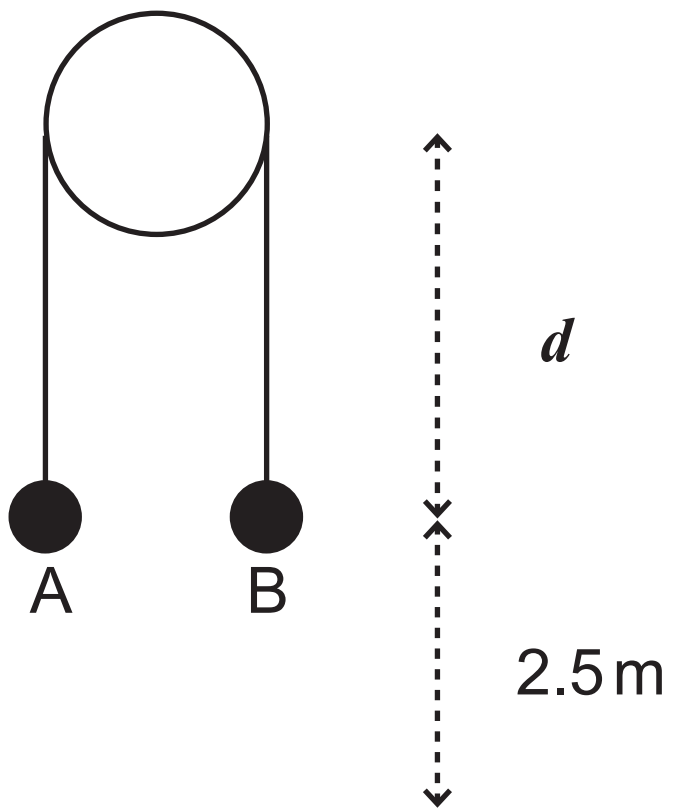

The particles are released from rest and B hits the horizontal surface with a speed of $4\,\mathrm{m\,s^{-1}}$

(i) Find the acceleration of the system as B descends towards the surface.
[2 marks]

For the motion prior to B hitting the surface:

(ii) complete the diagram below showing the external forces acting on A and B;
[2 marks]

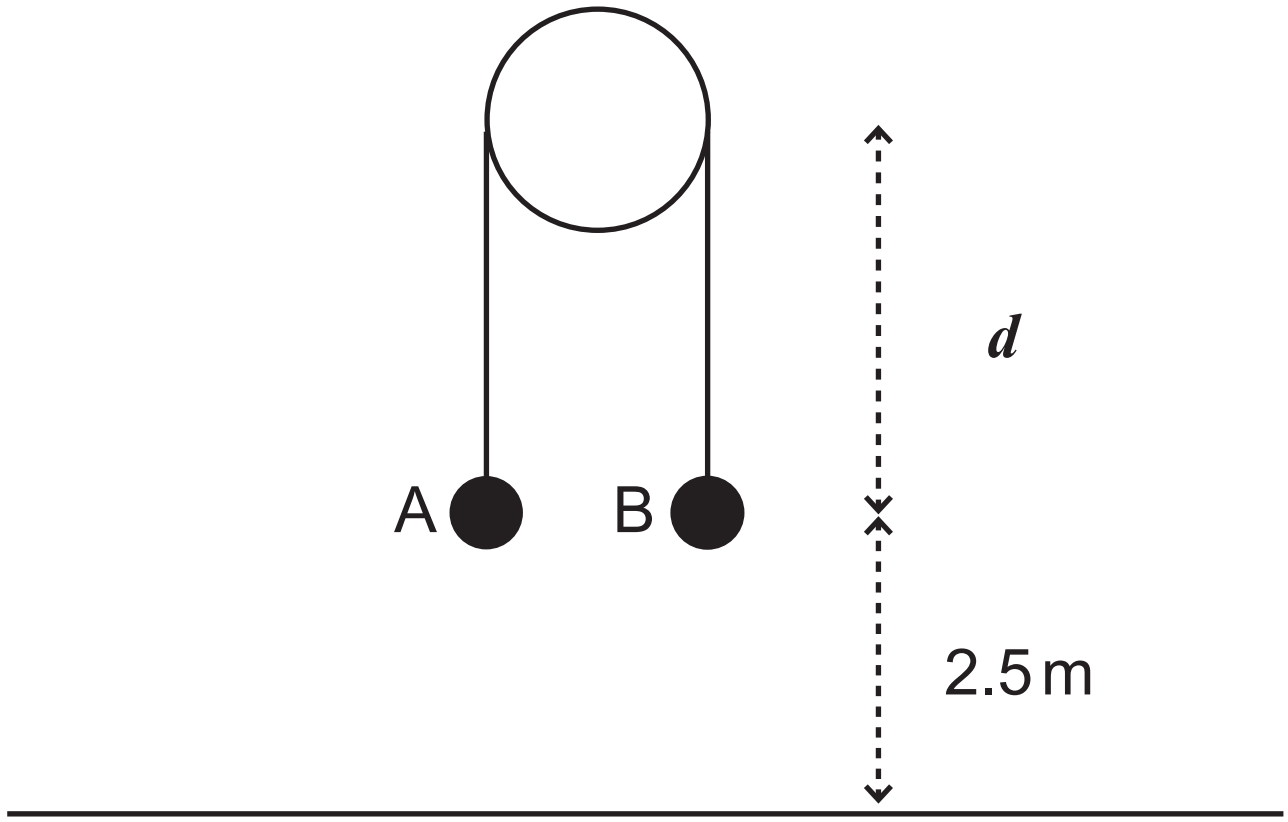

(iii) find the value of m. [5 marks]

After B hits the surface, A does not reach the pulley.

(iv) Find the minimum value of d, correct to the nearest cm, for which this is possible. [4 marks]

Blank Page

(Questions continue overleaf)

Section B

Statistics

5 The cumulative frequency diagram in **Fig. 2** opposite shows the ages, in years, of all runners who took part in a charity race.

Fig. 2

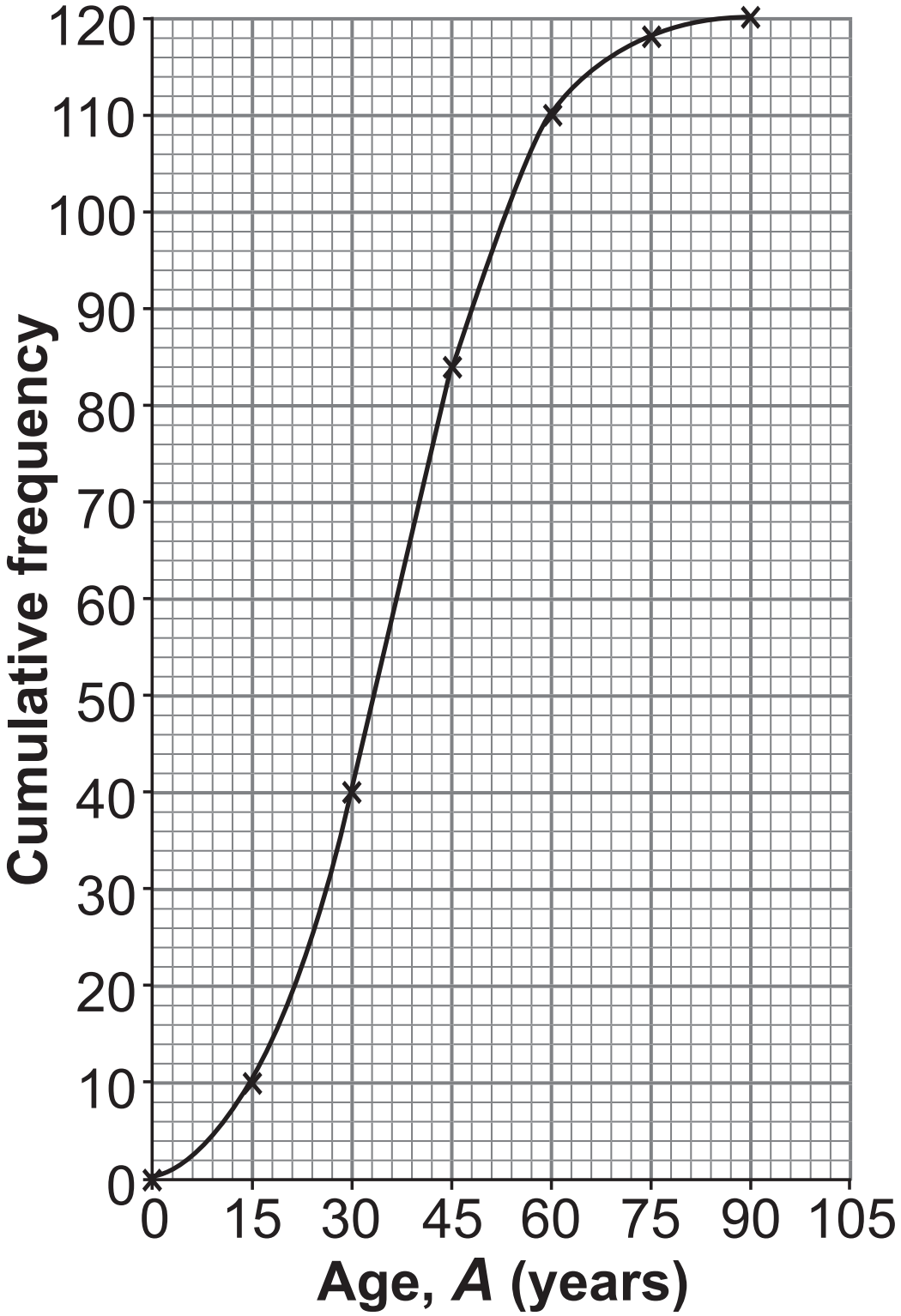
Cumulative frequency
120
110
100
90
80
70
60
50
40
30
20
10
0
0
15
30
45
60
75
90
105
Age, A (years)

For the data in the cumulative frequency diagram:

(i) show that an estimate of the mean age of the runners is 37.25 years;
[4 marks]

(ii) calculate an estimate of the variance of the ages of the runners. [3 marks]

For this data, an outlier is defined as any value which falls outside the range

$$Q_1 - 1.5(Q_3 - Q_1) \leqslant \boldsymbol{A} \leqslant Q_3 + 1.5(Q_3 - Q_1)$$

where Q_1 and Q_3 are the values of the lower and upper quartiles respectively.

(iii) Explain why there may not be any outliers in this data. [4 marks]

6 As part of the appraisal process, 48 employees at a large firm were asked to rate their job satisfaction, x, on a scale of 1 (very dissatisfied) to 10 (very satisfied).

For each employee, the number of days absent from work over the past year, y, was noted.

Summary statistics were calculated and are shown in **Table 1** below.

Table 1

Σx	Σy	Σx^2	Σy^2	Σxy
220	1099	1314	33145	4939

(i) Calculate the product–moment correlation coefficient for this data.
[5 marks]

(ii) Give an interpretation, in context, of the value you obtained in part **(i)**.
[2 marks]

The personnel manager tries to find the equation of the regression line for the data.

Her equation is $y = 2.8 + 0.97x$

(iii) How can you tell there is an error in this equation? [1 mark]

(iv) Explain why a regression line would be inappropriate for this data. [1 mark]

7 During the first three weeks of December, Amy runs a stall selling scented candles at a Christmas market. She only accepts payment for candles by cash or card.

In addition, customers can choose to have their candles gift wrapped.

Of the 115 customers who Amy served one Saturday, 48 had their candles gift wrapped, 77 paid by card and 3 customers who paid by cash did not have their candles gift wrapped.

(i) Using a Venn diagram, or otherwise, find the probability that a randomly selected customer had their candles gift wrapped and paid by card. [5 marks]

Amy claims that about two-thirds of all her customers pay by card.

(ii) Explain how Amy arrived at this figure and why she may not be correct.
[2 marks]

8 The probability distribution for the discrete variable X is such that

$X \sim \text{Bin}(4, p)$

Given that $9\text{P}(X = 3) = 4\text{P}(X = 1)$,
find the value of p. [8 marks]

This is the end of the question paper

SOURCES:

All images @CCEA

For Examiner's use only	
Question Number	**Marks**
1	
2	
3	
4	
5	
6	
7	
8	
Total Marks	

Examiner Number

Permission to reproduce all copyright material has been applied for.
In some cases, efforts to contact copyright holders may have been unsuccessful and CCEA will be happy to rectify any omissions of acknowledgement in future if notified.